Installation Guide **MMSE/PR**

LEDsmart+™

360 degree Occupancy Sensor with MultiMate™ technology

Patent Pending

Registered Design

Powered by MultiMate TECHNOLOGY

Designed in Australia to meet Australian Standards and installation conditions

Introduction

Product Summary

The LEDsmart+ Occupancy Sensor can be used by itself or can be connected to other LEDsmart+ devices that incorporate MultiMate™ technology.

Used by itself the sensor can switch on a lighting load when movement or Occupancy is detected.

Used with other LEDsmart+ devices, the sensor allows a versatile range of lighting control options including:

- Vacancy Mode (Manual-on / Auto-off)
- Occupancy Mode (Auto-on / Auto-off)
- Occupancy Mode with override-on
- Occupancy Mode with override-off

The LEDsmart+ Occupancy Sensor includes a circular mount kit to allow safe installation into plasterboard ceilings or walls. The elegant circular enclosure has a visible diameter of only 56 mm, with a small visible lens for the sensor.

Alternatively, the electronic mechanism can also be mounted directly into typical Australian switch mechanism apertures.

Item numbers

Item	Description
MMSE/PR	LEDsmart+ 360 degree Occupancy Sensor with MultiMate™ technology

Product Features

- Occupancy Sensor with a low profile.
- Suitable for mains load control up to a maximum of 400W (depending on load type).
- Compatible with and designed for operation with other LEDsmart+ devices using MultiMate™.
- Multiple operating modes.
- Timeout period from 1 minute to 60 minutes.
- Elegant 56 mm ceiling mount included – no other mounting hardware needed.
- Includes all items needed for cable termination and mains protective covers.
- Active-only two-wire connection – no neutral needed.
- Multiple Occupancy Sensors can be wired in parallel to extend coverage area.

Package Contents

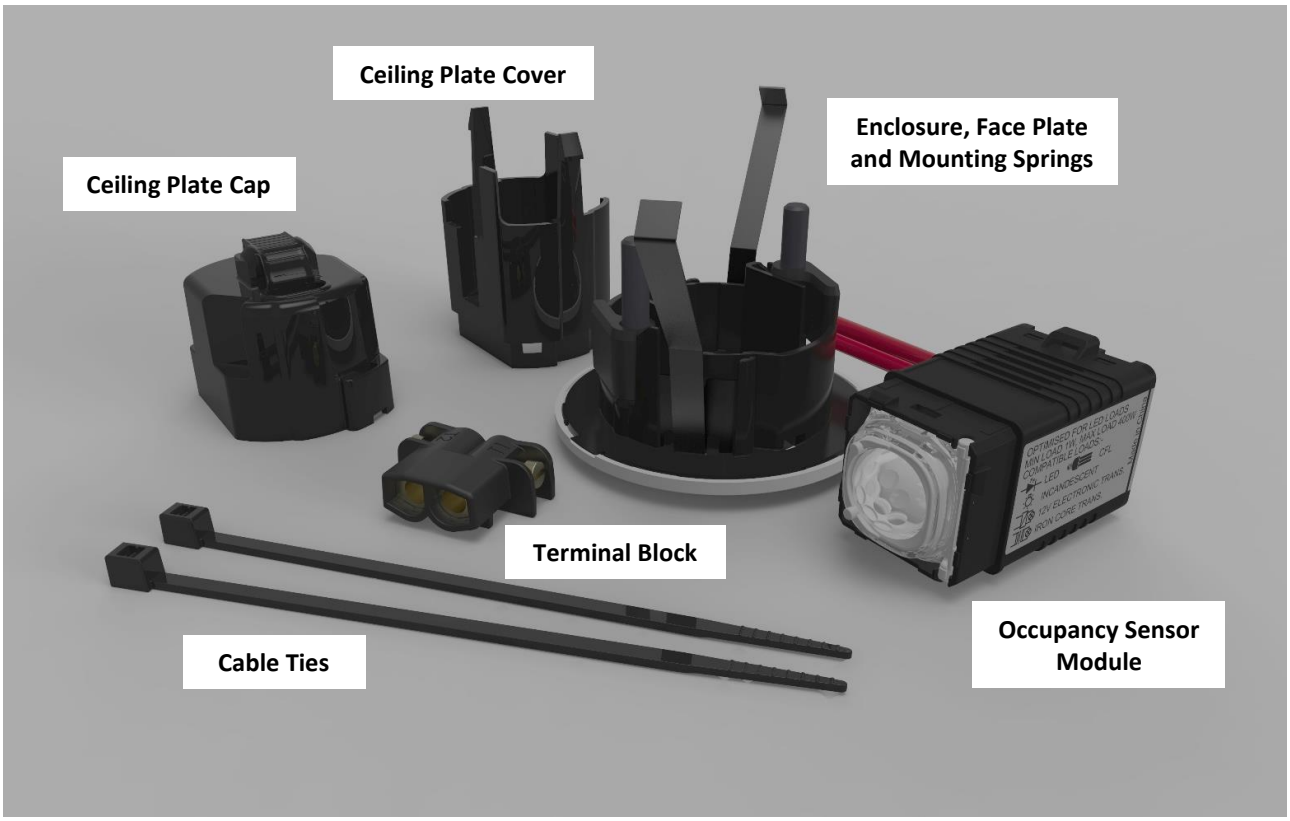

Important Notes and Safety Information

Electric shock may result in serious injury or death. Follow all warnings in this guide and the installation guide for devices to be mounted into this product, while working in accordance with the latest electrical safety practices.

Installation of all mains rated devices must be carried out by a suitably qualified installer who must work in accordance with standard safety procedures for mains-powered electrical equipment.

There are no user serviceable parts inside the Occupancy Sensor. Do not attempt to disassemble or operate the Occupancy Sensor with any covers removed.

The Occupancy Sensor is intended for indoor use only.

Consult the manufacturer's instructions for loads connected to the control module output terminals.

If you require information or assistance regarding the installation, configuration, or operation of the Occupancy Sensor, contact Technical Services at Diginet Control Systems. Contact details are on the back cover of this guide and at www.diginet.net.au.

There are a wide range of LED and CFL lamps available from different manufacturers. The following issues are occasionally seen when used in conjunction with 2-wire dimmer/timer/switch products.

- When switched off, the LED/CFL lights flicker, pulse on/off or do not switch off completely.
- When switched off, the LEDsmart+ LED indicators flicker.
- When switching on, the LED/CFL lights have difficulty staying switched on and the dimmer indicators flicker or pulse.

If these issues are experienced, install a Diginet 'Load by-pass' device (Diginet item number **MMBP**) across Load and Neutral terminals.

Product Capabilities

MultiMate™ Technology

MultiMate™ is a technology within Diginet's range of high quality LEDsmart+ dimmers, timers, switches and Occupancy Sensors. It allows multi-way control of lighting without the need for an expensive control system. MultiMate™ technology is suitable for both new and retrofit installations.

MultiMate™ technology enables multiple LEDsmart+ two-wire devices to be wired in parallel when two-way, three-way or multi-way dimming and switching is required. Dimmers, timers, switches and Occupancy Sensors can all be mixed on a single controlled circuit.

When connected in parallel, LEDsmart+ dimmers, timers, switches and Occupancy Sensors allow dimming and switching of connected lighting loads from multiple locations without any additional wiring. No strapper wires, dedicated remote switch wiring or 'control bus' is required.

MultiMate™ is a patented technology, developed in Australia by Gerard Lighting and Ozuno.

The wiring example below shows two LEDsmart+ dimmers connected in parallel with a LEDsmart+ Occupancy Sensor. Together these provide user-controlled two-way dimming with Occupancy Sensors ON or OFF functions on four downlights without any additional wiring.

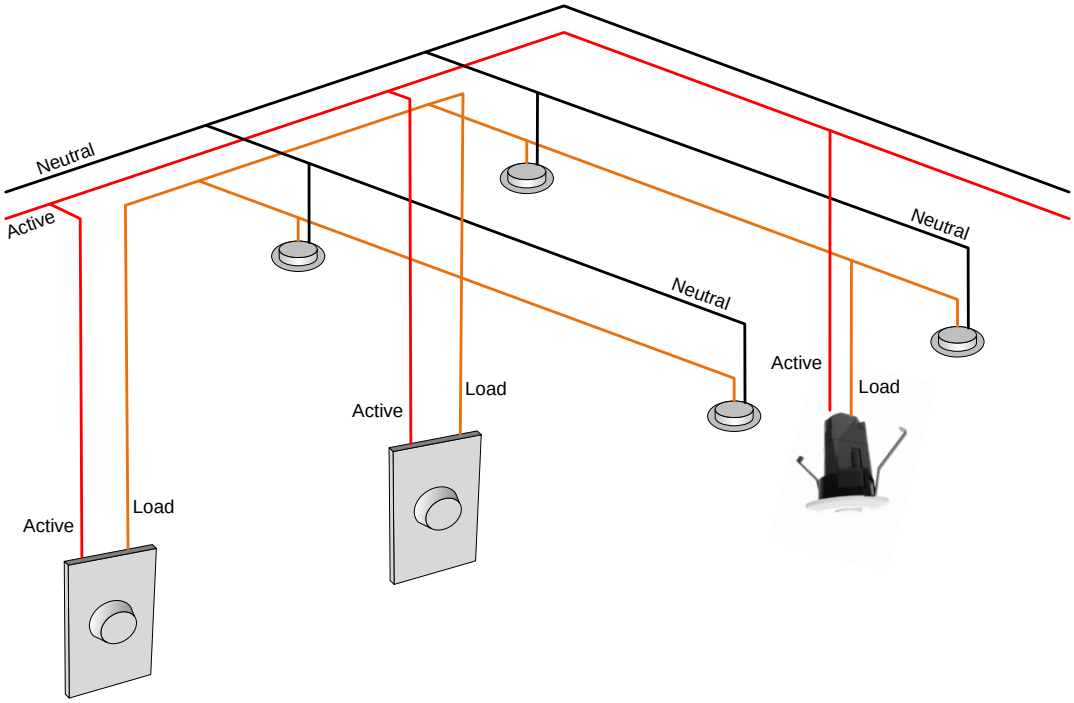

Number of LEDsmart+ Occupancy Sensors on a Controlled Circuit

Up to 8 LEDsmart+ Occupancy Sensors can be used on a single controlled circuit.

Other LEDsmart+ dimmer, timers or switches can also be used in addition to this limit.

Settings Shared Between Sensors

When multiple LEDsmart+ Occupancy Sensors are used on the same controlled circuit, all useful setup properties are communicated and shared between the sensors. For specialised applications this can be disabled.

Compatible MultiMate™ Devices

The LEDsmart+ Occupancy Sensor can be used either:

- As a stand-alone sensor controlling a load; or
- In conjunction with other LEDsmart+ devices that include MultiMate™ technology.

Compatible Diginet LEDsmart+ devices:

Item	Description	Features
MMDM/RT	LEDsmart+ Rotary Dimmer/Switch	Rotary Dimmer with built in on/off switch and multi-way control
MMDM/PB	LEDsmart+ Push Button Dimmer	Push Button Dimmer with built in on/off switch and multi-way control
MMTM/PB	LEDsmart+ Push Button Minute Timer	Push Button Timer programmable between 1 minute and 30 minutes with multi-way control
MMTH/PB	LEDsmart+ Push Button Hour Timer	Push Button Timer programmable between ¼ hour and 7½ hours with multi-way control
MMSW/PB	LEDsmart+ Push Button Electronic Switch	Push Button Electronic Switch for LED lighting with built in on/off switch and multi-way control
MMDM/DD	LEDsmart+ Digital Level Display	Level Display for use with any dimmer
STDM/BT	Diginet Sitara Bluetooth Dimmer	Bluetooth wireless connectivity and operation with LEDsmart+ in a controlled circuit
MMSR	LEDsmart+ Slave Relay Device	General Purpose ON/OFF control via trailing edge dimming devices

Installation and Wiring Connections

The wiring of this product uses 240Vac mains. The installing electrician must use suitable wiring and mounting practices to ensure compliance with AS3000.

Wall Mounting

The Occupancy Sensor can be mounted into a wall cavity using the supplied circular enclosure, or any compatible Australian industry standard wall plate.

When using the supplied circular enclosure in a wall cavity, the Ceiling Plate Cover and Ceiling Plate Cap are generally not required, however the installing electrician must still ensure compliance to AS3000.

When using a compatible Australian industry standard wall plate, the wiring should use the supplied terminal block. The supplied cable ties should be used to secure the terminal block to the rear of the Occupancy Sensor. Depending on the installation conditions, other measures may be needed to ensure compliance to AS3000.

Ceiling Mounting

When installing the Occupancy Sensor in a ceiling the supplied Terminal Block, Ceiling Plate Cover and Ceiling Plate Cap should be used to terminate, secure and make safe the mains rated connections, as required by AS3000 Wiring Rules.

If the supplied Terminal Block, Ceiling Plate Cover and Ceiling Plate Cap are not used, the installing electrician must ensure compliance to AS3000 requirements using other means.

Assembly Using the Ceiling Accessories

STEP 1

Snap the Occupancy Sensor into the Enclosure from the rear.

Note that it is important to ensure the orientation of the device matches the illustration below, the device face with cable connections should be orientated away from Lock Arms.

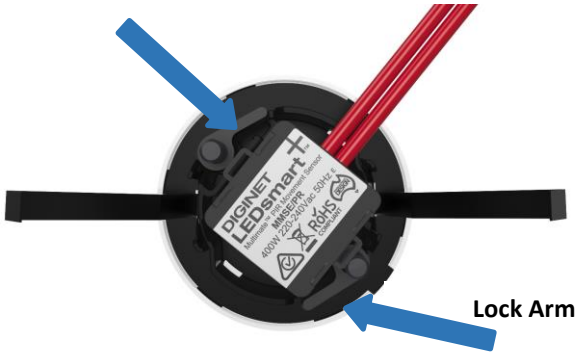

STEP 2

Cut a circular hole with a diameter of between 42mm and 44mm at the required position.

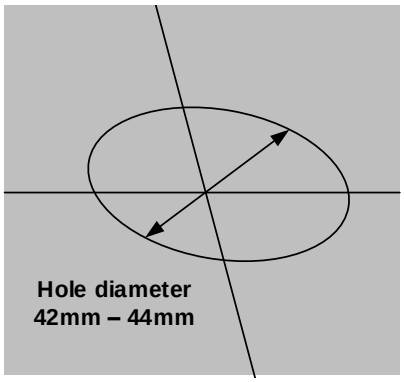

STEP 3

a. Ensure that the device cables are threaded through the Ceiling Plate Cover.
b. Ensure that the Ceiling Plate Cover slots and the lock arms are lined up, as shown to the right.

STEP 4

Snap the Ceiling Plate Cover firmly in place.

STEP 5

a. Ensure the Mains TPS cable is threaded through the Ceiling Plate Cap.
b. Terminate the Mains supply cable and the device cables, using the supplied terminal block.

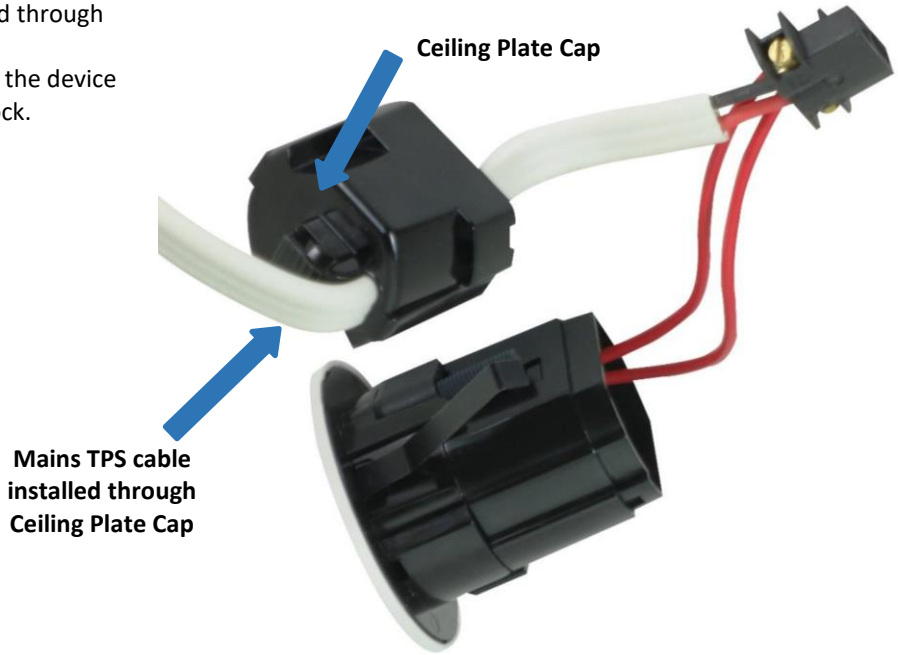

STEP 6

a. Fold the terminal block to fit into the Ceiling Plate Cap as shown.
b. Pull enough mains TPS cable out of the cap for the terminal block to fit inside.

Take care to ensure that both layers of insulation for the mains cable remain inside the Ceiling Plate Cap.

STEP 7

When termination is completed, and the terminal block is properly lined up in the Ceiling Plate Cap, snap the Ceiling Plate Cap firmly into place.

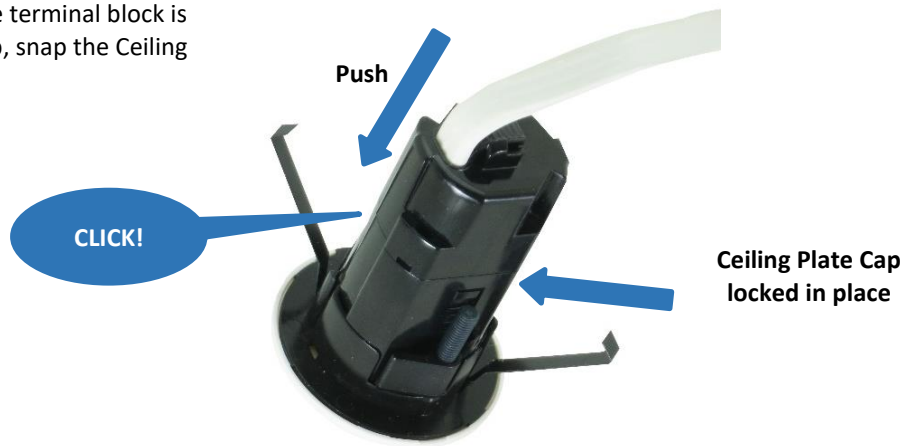

STEP 8

The Mains supply cable must be tied to the rear cap to ensure sufficient cable strain relief, as shown below. Two suitable cable ties are included.

Mounting using the Lock Arms

In some cases, the lock arms may be preferable to the spring clips, for either wall or ceiling mounting.

To use the lock arms, follow these steps after wiring.

STEP 1

Unclip the white front Face Plate of the assembly and set it aside in a clean place.

STEP 2

With the lock arms rotated so they are against the enclosure, place the complete, wired assembly into the wall or ceiling.

STEP 3

Tighten the two mounting screws.

This will rotate the lock arms to the locked position and lock the arms against the rear of the mounting surface.

Do not over tighten the mounting screws.

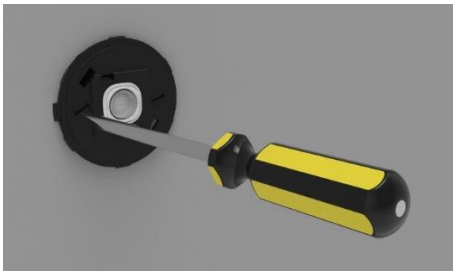

STEP 4

Clip on the Face Plate by pushing firmly at the top and bottom of the plate.

There is only one correct orientation for the face plate: the small tab on the mounting plate should align with the corresponding notch on the face plate.

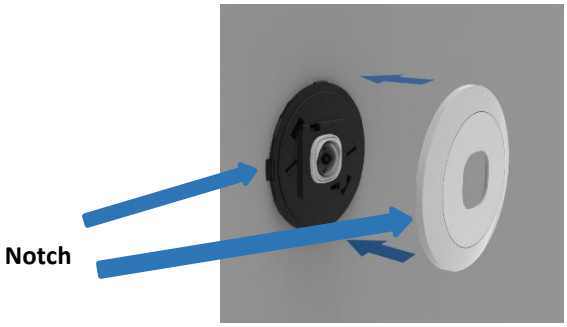

Mounting Using the Spring Clips

When installing the Occupancy Sensor into a suspended ceiling tile or similar, it is often more convenient to use the included spring clips.

The spring clips are pre-fitted when the enclosure is supplied. Simply push the assembled and wired Occupancy Sensor into place.

Removal of the lock arms is optional. They can be left in place if they do not interfere with the spring clip mounting.

Wiring for Stand-alone Operation

The Occupancy Sensor is wired in series with the load, as for any normal 2-wire motion sensor or electronic switch.

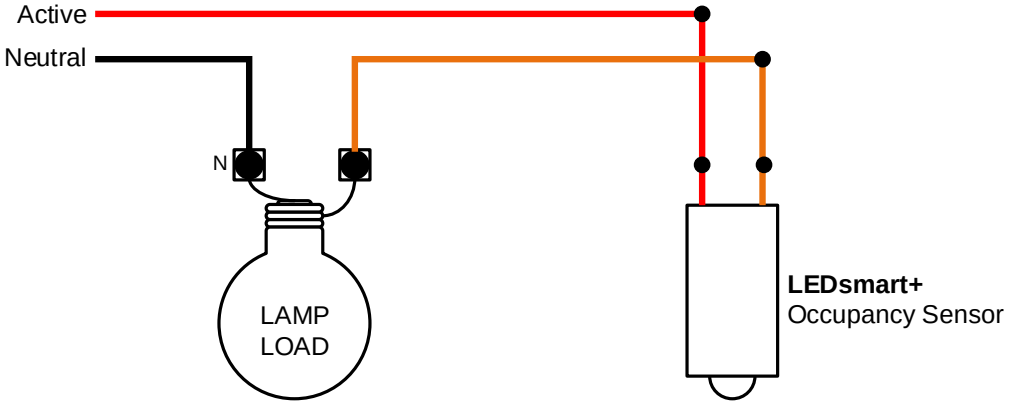

Using Multiple Occupancy Sensors

Using more than one Occupancy Sensor allows a larger coverage area. The sensors are wired in parallel with each other. Up to 8 Occupancy Sensors can be used on a single controlled lighting circuit.

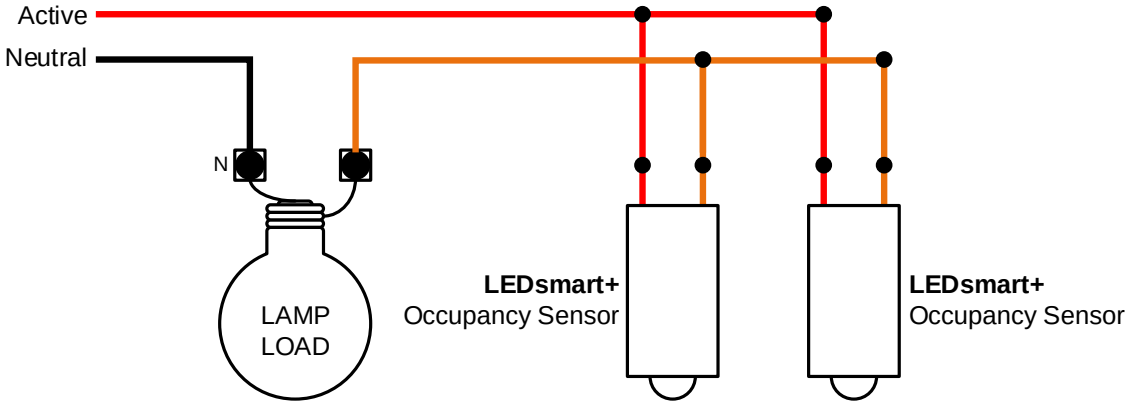

Operation with MultiMate Devices

The Occupancy Sensor can be mixed with LEDsmart+ MultiMate™ dimmers, timers or switches to allow combinations of multi-way control, occupancy sensing, and optional override.

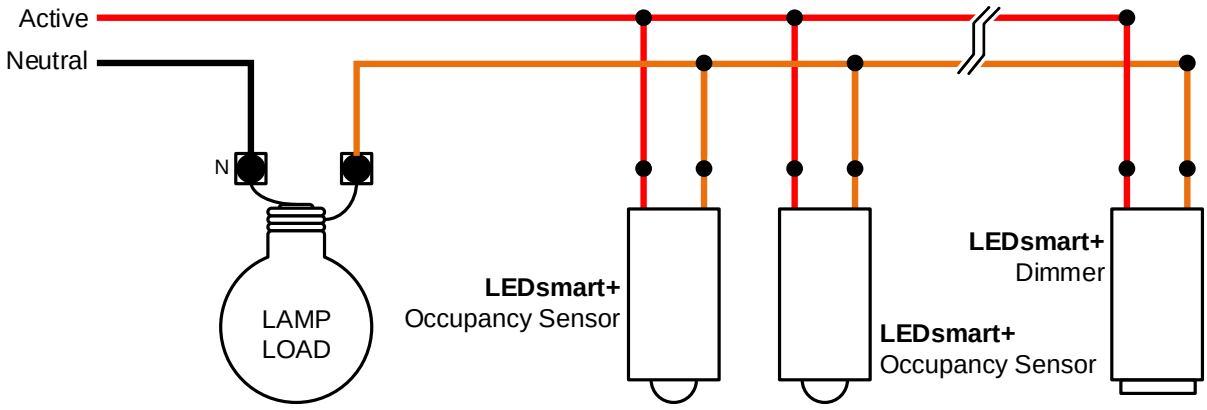

Occupancy Sensor Button and Indicators

The Occupancy Sensor includes a local operation button, and an illuminated indicator ring.

The button allows local operation and setup. The indicator ring shows when the sensor is controlling the load and provides user feedback in setup mode.

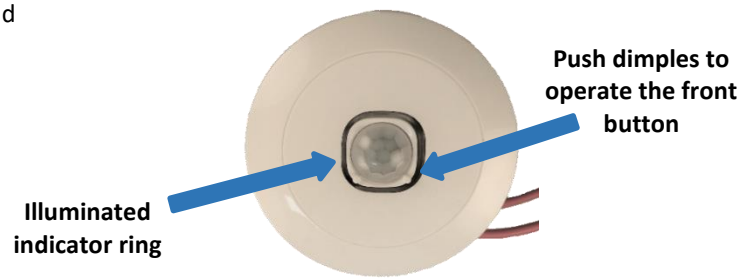

Sensor Front Button

The front button on the Occupancy Sensor has these functions:

Tap & Release:	Toggles the load: If the load is OFF, a tap and release sets the load ON. The sensor may start its timing function (depending on setup). If the load is ON, a tap and release sets the load OFF. If Walk Test Mode is active, exit Walk Test Mode.
Press and hold about 3 seconds:	Enter Walk Test Mode.
Press and hold for 10 - 30 seconds:	Enter Setup Mode - See separate section about Setup Mode.

*The front button on the Occupancy Sensor **does not** allow dimming by push and hold.*

Occupancy Sensor Indicator Ring

The indicator ring shows the operating condition of the Occupancy Sensor:

Sensor Enabled:	Indicator ON.
Sensor Overridden or Exit Delay active:	Indicator OFF.
Walk Test active:	Indicator blinking rapidly.
Warm up:	After power-up there is a 30 second warm-up period. During this time the indicator is ON and it blinks briefly to OFF.

*Indicator ring ON/OFF status **is not** related to the load On/Off state.*

Operating Features

Exit Delay

When the load is turned OFF by another LEDsmart+ MultiMate™ product, an Exit Delay of 10 seconds applies. During the Exit Delay, any Occupancy Sensors on the controlled circuit will not respond to movement.

This allows a person to manually turn the load OFF (using for example a LEDsmart+ MultiMate™ dimmer), then walk out of the space past any Occupancy Sensors, and the Occupancy Sensor(s) will not turn the load back ON again.

Exit Delay only applies for control by LEDsmart+ MultiMate™ dimmers, timers or switches. No exit delay applies if several Occupancy Sensors are used and one of the sensors turns OFF the load.

Level Changes by Other MultiMate™ Devices

LEDsmart+ MultiMate™ dimmers can be used to adjust the lighting level whenever a load is ON. When this lighting level adjustment is made, new detection of movement by an Occupancy Sensor will ***not*** set the level back to the Maximum value configured in that sensor.

User level settings are respected by the Occupancy Sensor: New movement detection will not override the lighting level.

*Note: This function **does not** require the Memory Dimmer option in the Occupancy Sensor to be enabled.*

Product Options

Advanced Timer Option

If the Advanced Timer Option is enabled, then the load will be dimmed for 1 minute at the end of the time out interval. This provides a 1 minute advanced warning that the lighting is about to switch off.

During the 1 minute warning period, movement detection will set the load to the sensor maximum level and restart any timing operations.

The Factory Default condition is that the advanced timer option is ***disabled***.

Toggle or Memory Dimmer Option

The Occupancy Sensor supports both Toggle and Memory Dimmer functions:

Toggle: When the Occupancy Sensor sets the load ON, caused either by motion or pushing the front button, it will set the load to the Maximum Level.

Memory Dimmer:

a. When the Occupancy Sensor sets the load ON, caused either by motion or pushing the front button, it sets the load to the previously-stored Memory Level.

b. When the level of the load is altered from another device, and the load is subsequently turned OFF (either by this Occupancy Sensor or any other device), the level just before setting OFF is stored and becomes the new Memory Level.

The Factory Default conditions are:

- Memory Dimmer function is ***disabled*** (this means Toggle operation is used); and
- The Occupancy Sensor sets the load ON at the default maximum level.

Light Level Option

The Occupancy Sensor includes light level measurement.

When light level measurement is enabled and one of the Occupancy modes is selected, the Occupancy Sensor will only turn the load ON if the sensor is in an ambient light level of less than 10 lux. For a ceiling mounted Occupancy Sensor, this corresponds to less than around 100 – 400 lux on a typical desktop surface. Therefore, if the light level in the space is at the level of a typical office, the sensor is inhibited.

The Factory Default condition is that light level measurement is ***disabled***.

Operating Modes

Occupancy Mode (Auto-On, Auto-Off, no override)

Movement turns the load ON and starts the turn-OFF timer in the sensor.

Turning the load ON from the Occupancy Sensor local button or a LEDsmart+ MultiMate™ device (dimmer / timer / switch) starts the turn-OFF timer in the sensor. The load will always be turned OFF, even if it was turned ON from another device.

When the load is ON, further movement detection retriggers the turn-OFF timer, extending the timeout.

Multiple Occupancy Sensors extend the coverage range. The last sensor to detect movement defines the timeout.

The Factory Default operating mode is ***Occupancy Mode***.

Vacancy Mode (Manual-On, Auto-Off, no override)

Movement is ignored if the lights are OFF.

Turning the load ON from the Occupancy Sensor local button or a LEDsmart + MultiMate™ device (dimmer / timer / switch) starts the turn-OFF timer in the sensor. The load will always be turned OFF, even if it was turned ON from another device.

When the load is ON, further movement detection retriggers the turn-OFF timer, extending the timeout.

Multiple Occupancy Sensors extend the coverage range. The last sensor to detect movement defines the timeout.

Occupancy Mode with Override On

Same as ***Occupancy Mode***, but an ON-Override is added. Manually setting the load ON stops all timing operations.

Override Operation

- Turn the load ON from the Occupancy Sensor local button; or
- Adjust the level from another LEDsmart+ MultiMate™ product: any level that is not OFF will cause override.

When override is active, the load remains ON indefinitely and movement has no effect.

To cancel override, turn the load OFF from an Occupancy Sensor local button or a connected LEDsmart+ MultiMate™ device. This will turn the load OFF and resume normal Occupancy Mode operation.

Occupancy Mode with Override Off

If an Occupancy Sensor was the most recent device to turn the load OFF, or the Occupancy Sensor has just powered up, then operation is the same as ***Occupancy Mode***. An OFF-override is added: Manually setting the load OFF stops all timing operations and movement detection.

If several Occupancy Sensors are used, movement or a sensor timeout does ***not*** cause an override. Multiple Occupancy Sensors extend the coverage range. The last sensor to detect motion defines the time-out.

Override Operation

- Turn the load OFF from the Occupancy Sensor local button; or
- Turn the load OFF from another LEDsmart+ MultiMate™ device (dimmer / timer / switch).

When override is active, the load remains OFF indefinitely and movement has no effect.

To cancel override:

- Turn the load ON manually from an Occupancy Sensor button; or
- Adjust the level from another LEDsmart+ MultiMate™ product: any level that is not OFF will cancel the override.

After cancelling override, the Occupancy Sensor will detect movement and turn the load ON with timing.

To Activate Walk Test

To place a LEDsmart+ Occupancy Sensor into Walk Test Mode:

a. Push and hold the front button.
b. After pushing, the indicator ring will turn off. Keep holding until the indictor ring turns on again – about 3 seconds.
c. Indicator blinks rapidly to show that the unit is in Walk Test mode.

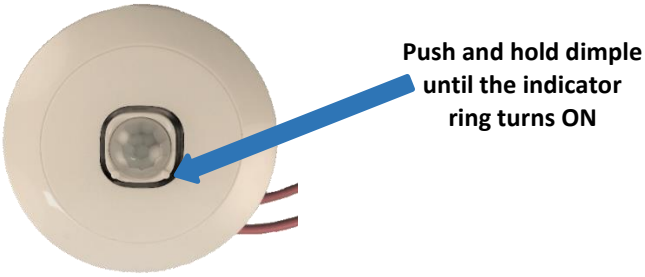

In walk test mode:

- Only the Occupancy Sensor placed into walk test mode will be active. Other Occupancy Sensors on the same controlled circuit will become passive. Walk test applies ***only*** on the sensor manually placed into walk test mode.
- A 1 second timer period is used in walk test mode, but continuous movement will reset that timeout and extend the period the load is on.
- Walk test will exit after 3 minutes where no movement is detected.
- Exit walk test by a tap of the front button.

Caution! Holding the front button too long to enter walk test will enter setup instead!

Setup

Setup Introduction

The Occupancy Sensor functions and options can be changed by entering setup mode and following a few easy steps.

The following options can be changed in setup mode:

Option	Setup Clicks	See Part	Range	Default	Scope
Time-out	2	B	1 – 60 minutes	15 minutes	Global
Load Maximum Level	3	C	1 – 100%	100%	Global
Advanced Timer Option	4	D	Enabled/Disabled	Disabled	Global
Status Indication	5	D	Enabled/Disabled	Enabled	Global
Sensor Operating Mode	6	E	Occupancy Mode Vacancy Mode Occupancy Mode with Override On Occupancy Mode with Override Off	Occupancy Mode	Global
Dimmer type	7	F	Memory/Toggle Dimmer	Toggle	Global
MultiMate	8	D	Enabled/Disabled	Enabled	Local
Light Level	9	D	Enabled/Disabled	Disabled	Global
Factory Reset	10	G	-	-	Local

Global settings and options apply to all Occupancy Sensors on the controlled circuit.
Local settings and options apply only to the Occupancy Sensor being adjusted.

A: Entering Setup Mode

If the Occupancy Sensor has been powered up for **LESS THAN 15 MINUTES** see A1 below.

If the Occupancy Sensor has been powered up for **MORE THAN 15 MINUTES** see A2 below.

Once in Setup Mode, options are selected by a series of clicks of the front button. Each click should be within about 1 second of the previous click.

A1: Entering Setup when the Occupancy Sensor has been powered up for LESS THAN 15 MINUTES

Step 1 Press and hold the front button for 10 seconds.

Connected lights may turn on or off, this is normal.

Step 2 The indicator ring will blink ON/OFF twice per second. This indicates that the sensor is in Setup Mode.

If more than one Occupancy Sensor is connected in parallel, they all enter setup mode. The blink ON/OFF will also be see on all other Occupancy Sensors connected in parallel.

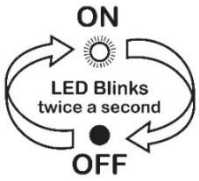

In the unlikely event that other Occupancy Sensors connected in parallel do not enter setup, exit and try again.

Step 3 The Occupancy Sensor is ready for the settings to be adjusted as required. Go to the relevant setup function instructions.

A2: Entering Setup when the Occupancy Sensor has been powered up for 15 MINUTES OR MORE

Step 1 Press and hold the front button for 30 seconds.

This resets the Setup Entry time back to 10 seconds (for the next 15 minutes)

Connected lights may turn on or off, this is normal.

Step 2 The indicator ring will blink ON/OFF twice per second. This indicates that the sensor is in Setup Mode.

If more than one Occupancy Sensor is connected in parallel, they will all enter setup mode. The blink ON/OFF will also be see on all other Occupancy Sensors connected in parallel.

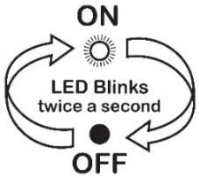

In the unlikely event that other Occupancy Sensors connected in parallel do not enter setup, exit and try again.

Step 3 The Occupancy Sensor is ready for the settings to be adjusted as required. Go to the relevant setup function instructions.

B: Setting Timeout

Step 1 Enter the Occupancy Sensor Setup Mode - See PART A (page 14).

Step 2 Click the front button twice.

To cancel/exit do nothing for 30 seconds.

Step 3 The indicator ring will blink 2 times.

If more than one Occupancy Sensor is connected to the same load, they all now blink 2 times and enter Timeout Setup Mode.

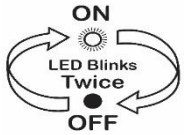

Step 4

a. Press and hold the front button.

b. The indicator ring will blink as the time period is set:

Each blink = 1 minute up to 5 blinks (5 minutes set).

Subsequent double blinks add 5 minutes per double blink up to a maximum of 60 minutes.

Trying to set a timeout of 0 will result in a setting of 1 minute.

The unit will automatically save and exit Setup Mode once a Timeout of 60 minutes is reached.

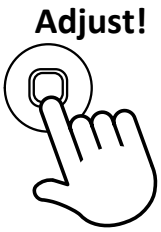

Step 5 When the desired time is reached, release the button.

The timeout interval is saved, and setup will exit automatically.

If more than one Occupancy Sensor is connected to the same load, they all now save the timeout and exit setup.

This step does not require a separate single click to save the setting.

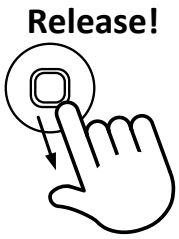

C: Setting Load Maximum Level

Step 1 Enter the Occupancy Sensor Setup Mode - See PART A (page 14).

Step 2 Click the front button 3 times.

To cancel/exit do nothing for 30 seconds.

Step 3 The indicator ring will blink 3 times.

The load will switch ON at the current maximum level.

If more than one Occupancy Sensor is connected to the same load, they all now blink 3 times.

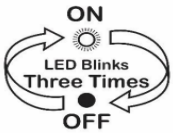

Step 4

a. Press and hold the front button to adjust the maximum level.

b. Release the front button and then press and hold again to change the dimming direction.

c. Release when the maximum level is suitable.

To cancel/exit do nothing for 30 seconds.

Step 5 Click once to save & exit.

If more than one Occupancy Sensor is connected to the same load, they all now save the same maximum level and exit setup.

D: Setting Options that are ENABLED or DISABLED

(Advanced Timer Option / Status Indication / MultiMate™ / Light Level)

The steps and method are the same for all these options. The differences are:

a. The number of clicks use to select the option to change; and
b. The number of blinks used to show that the option was selected.

Step 1 Enter the Occupancy Sensor Setup Mode - See PART A (page 14).

Step 2

For ADVANCED TIMER OPTION:	Click the front button 4 times.
For STATUS INDICATION:	Click the front button 5 times.
For MULTIMATE™:	Click the front button 8 times.
For LIGHT LEVEL:	Click the front button 9 times.

To cancel/exit do nothing for 30 seconds.

Step 3 The indicator ring will blink:

For ADVANCED TIMER OPTION:	4 times.
For STATUS INDICATION:	5 times.
For MULTIMATE™:	8 times.
For LIGHT LEVEL:	9 times.

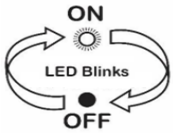

After blinking:

If the selected option is ***enabled***, the load will be set ON.

If the selected option is ***disabled***, the load will be set OFF.

If more than one Occupancy Sensor is connected to the same load, they all now blink the same number of times.

Exception: If changing MultiMate™ option then only the Occupancy sensor being adjusted will blink 8 times.

Step 4

a. To enable the selected option:

Press and hold the front button until the load is set ON.

b. To disable the selected option:

Press and hold the front button until the load is set OFF.

To cancel/exit do nothing for 30 seconds

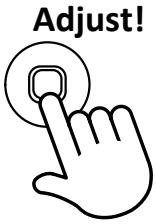

Step 5 Click once to save & exit.

If more than one Occupancy Sensor is connected to the same load, they all now save the new setting for the selected option and exit setup.

Exception:

- *The MultiMate™ option is only saved in the Occupancy Sensor where the setting was changed.*
- *If the MultiMate™ option is set to **disabled,** then that device will no longer communicate with any other MultiMate™ products on the same controlled circuit.*

E: Sensor Operating Mode

Select between the operating modes:

Occupancy
Vacancy
Occupancy with Override On
Occupancy with Override Off

Refer to page 12 for a description of each of the operating modes.

Step 1 Enter the Occupancy Sensor Setup Mode - See PART A (page 14).

Step 2 Click the front button 6 times.

To cancel/exit do nothing for 30 seconds.

Step 3 The indicator ring will blink 6 times.

The load will be set OFF.

If more than one Occupancy Sensor is connected to the same load, they all now blink 6 times.

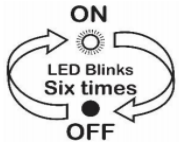

Step 4

a. **Press and hold** the front button to adjust operating mode.

b. Count the number of blinks of the indicator ring while holding the front button.

c. Release after seeing the number of blinks for the setting to be applied:

1 blink:	OCCUPANCY mode
2 blinks:	VACANCY mode
3 blinks:	OCCUPANCY mode with OVERRIDE ON
4 blinks:	OCCUPANCY mode with OVERRIDE OFF

To cancel/exit do nothing for 30 seconds.

Step 5 When the operating mode has been selected, release the button.

The operating mode is saved and setup will exit automatically.

If more than one Occupancy Sensor is connected to the same load, they all now save the new operating mode and exit setup.

This step does not require a separate single click to save the setting.

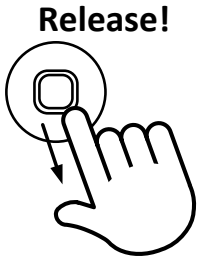

F: Dimmer Type

Step 1 Enter the Occupancy Sensor Setup Mode - See PART A (page 14).

Step 2 Click the front button 7 times.

To cancel/exit do nothing for 30 seconds.

Step 3 The indicator ring will blink 7 times.

If the Memory Dimmer is function is active, the load will be set ON.

If the Toggle Dimmer function is active, the load will be set OFF.

If more than one Occupancy Sensor is connected to the same load, they all blink 7 times.

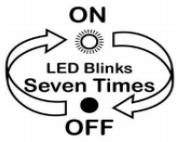

Step 4

a. To select the Memory Dimmer function:

Press and hold the front button until the load is set ON.

b. To select the Toggle Dimmer function:

Press and hold the front button until the load is set OFF.

To cancel/exit do nothing for 30 seconds

Step 5 Click once to save & exit.

If more than one Occupancy Sensor is connected to the same load, they all now save the new setting for Dimmer Type and exit setup.

G: Factory Reset

Step 1 Enter the Occupancy Sensor Setup Mode - See PART A (page 14).

Step 2 Click the front button 10 times.

Step 3 The Occupancy Sensor will reset all settings to defaults, and then automatically exit setup.

Occupancy/Occupancy Detection

The Passive Infra-red (PIR) sensor uses an advanced detector and lens array to provide the ultimate coverage in its class. The sensor head has two distinct detection sensitivity zone categories, major movement and minor movement.

Major Movement[1] (Occupancy) is defined as a 60kg person, walking at >1m/s, across the field of view, with a background ambient temperature of 20°C.

The PIR sensor will detect *Major Movement* within a 7m diameter circular area of its position when mounted at 2.7m from the floor as shown below.

Minor Movement[1] (Occupancy) is defined as a hand and forearm at 0.9m from the floor moving through a 90° arc in <1.5 sec with a background ambient temperature of 20°C.

The PIR sensor will detect *Minor Movement* within a 3.5m diameter circular area of its position when mounted at 2.7m from the floor as shown below.

[1] Referenced from the NEMA Guide Publication WD 7-2011, Occupancy Motion Sensors Standard, National Electrical Manufacturers Association, Virginia, USA, 2012

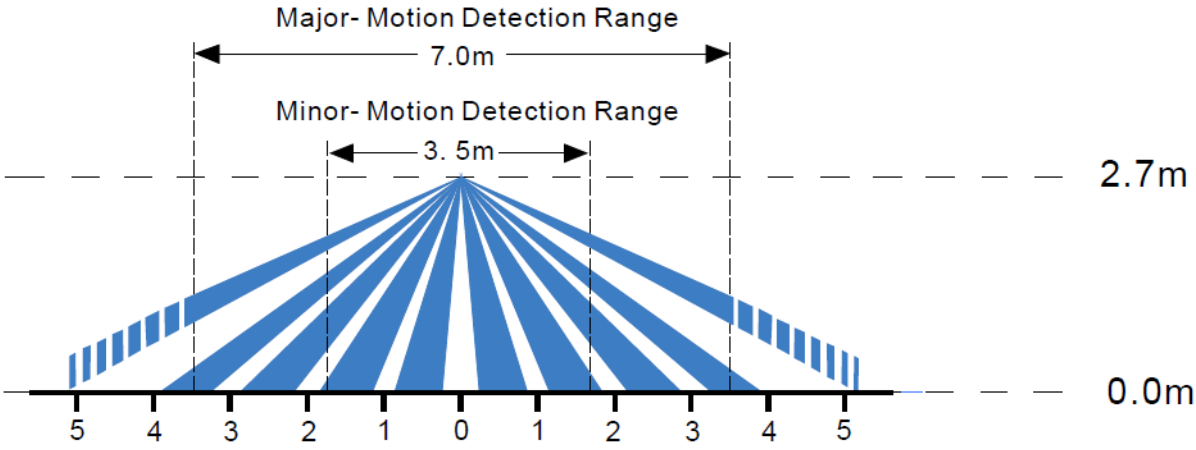

Detection coverage when mounted at 2.7m

Note: Additional detection outside these areas may be noticed subject to external temperature, mounting height and movement activity.

Dimensions

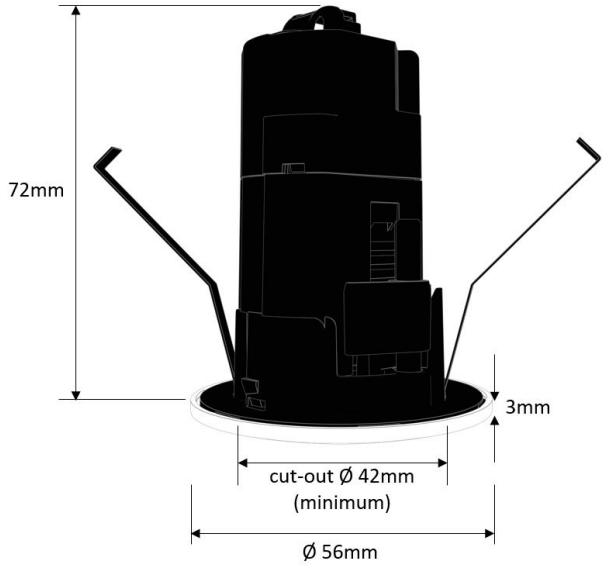

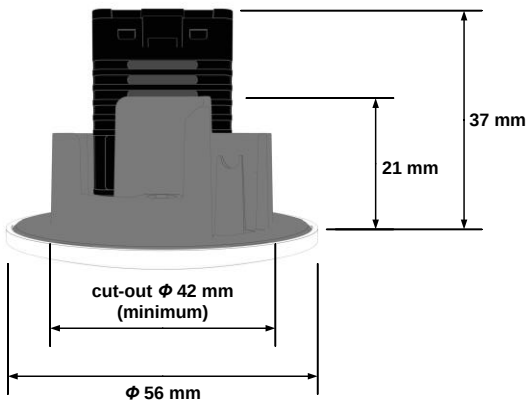

Specifications

Parameter	Specification
Nominal Line Voltage Amplitude Range	220-240Vac
Line Voltage Frequency	50Hz Nominal (47 - 53Hz)
Load Brightness Control Range	0% to 100% (typical for LED loads)
Rated Load	Refer Compatible Loads
Minimum Load	1W
Dimensions	See separate Diagram
Weight	100g
Operating Temp. Range	0-50°C
Operating Humidity Range	< 95% RH non-condensing
Housing Material type	Flame Retardant Polycarbonate
IP Rating	IP20
Light Level Threshold (when enabled)	10 lux on the Occupancy Sensor face For ceiling mount, corresponds to approximately 100 – 400 lux incident on a desktop
Maximum cable distance from any LEDsmart+ device to the parallel junction point	50m (for example, an Occupancy Sensor and a dimmer can be separated by up to 100m provided that the maximum distance from the furthest dimmer to the parallel junction point is no more than 50m).
Power-up state	Power up OFF
Warm-up Delay	30 seconds (after power up)
Maximum number of sensors connected in parallel	8
Compliance	RoHS COMPLIANT CE

Compatible Load Types

Load Symbol	Load Type	Maximum Load	Notes
	Dimmable LED Lamps / Drivers	400W	The LED driver must be dimmable. Maximum permitted number of drivers is 400W divided by driver nameplate power rating. Due to variety of LED lamp designs, maximum number of LED lamps is further dependent on power-factor result when connected to dimmer.
	Electronic Transformers	400W	
	Standard Iron-Core Transformers	250W	Due to variety of transformer designs, maximum LV lighting load is further dependent on transformer efficiency.
	Toroidal Iron-Core Transformers	300W	
	Incandescent	350W	
	Dimmable CFLs	400W	Due to variety of CFL designs, maximum number of CFL lamps is dependent on particular CFL make/model.

Incompatible Load Types

Ceiling Sweep Fans and Exhaust Fans.

These devices can be controlled using the Ledsmart+ Slave Relay Device (Diginet item code MMSR).

Multi-Gang De-Rating

Where multiple LEDsmart+ MultiMate™ devices are installed in the same multi-gang plate, a de-rating factor is applied to the maximum load rating, as follows:

Number of items per plate:	De-rating factor
1	None
2	0.85
3	0.7
4	0.55
5	0.4
6	0.25

De-rating Example
A LEDsmart+ Dimmer and Occupancy Sensor are installed in a wall plate. The maximum LED load that can be connected to each device = 400W x 0.85 = 340 W per device.

Standards and Compliance

The MMSE/PR product is designed to meet/exceed the following Australian and International standards:

Australian/New Zealand EMC and Electrical Safety Frameworks and Standards

Regulation	Standard	Title
Electrical Safety	AS/NZS 60669.2.1:2013	Switches for household and similar fixed electrical installations. Particular requirements - Electronic switches (IEC 60669-2-1, Ed.4.1 (2009) MOD)
EMC	AS/NZS CISPR 15:2011	Limits and methods of measurement of radio disturbance characteristics of electrical lighting and similar equipment (CISPR 15, Ed.7.2 (2009) MOD)

Other International Directives and Standards

Regulation	Standard	Title
Electrical Safety	EN 60669-2-1:2010 A2	Switches for household and similar fixed electrical installations. Part 2-1: Particular requirements - Electronic switches
EMC	EN 55015:2006	Limits and methods of measurement of radio disturbance characteristics of electrical lighting and similar equipment
	EN 61547:2009	Equipment for general lighting purposes - EMC immunity requirements
	EN 61000-3-2:2006	Electromagnetic compatibility (EMC) - Part 3-2: Limits - Limits for harmonic current emissions (equipment input current ≤ 16A per phase)
	EN 61000-3-3:2008	Electromagnetic compatibility (EMC) - Part 3-3: Limits - Limitation of voltage changes, voltage fluctuations and flicker in public low-voltage supply systems, for equipment with rated current ≤ 16A per phase and not subject to conditional connection

Product warranty

These products have a two-year warranty against manufacturing defects in accordance with the following terms:

1. Nothing in this Warranty affects any person's rights under the Australian Consumer Law. The benefits to any person under the Gerard Lighting Warranty are in addition to the rights and remedies available under any Consumer Guarantees.
2. Subject to the other clauses of this Warranty, Gerard Lighting warrants that the Goods will be free of manufacturing defects and will perform to Gerard Lighting's specifications.
3. The benefit of the Gerard Lighting Warranty extends only to the owner of the property in which the Goods are installed (the Owner) for two (2) years after the date of purchase (Warranty Period).
4. If within the Warranty Period the Goods fail to perform to Gerard Lighting's specifications as a result of some defect in material or workmanship in the Goods (Defect) then Gerard Lighting will, at its option, repair the Goods or supply replacement Goods free of charge.
5. The Gerard Lighting Warranty will not apply to Goods:
   - 5.1. installed by any person other than a qualified tradesperson; or
   - 5.2. subjected to misuse, neglect, negligence or accidental damage; or
   - 5.3. operated in any way contrary to any operating or maintenance instructions; or
   - 5.4. improperly handled, installed or maintained; or
   - 5.5. altered or modified prior to or after installation.
6. The Gerard Lighting Warranty does not apply to faulty or defective design of Goods unless Gerard Lighting has designed the Goods and Gerard Lighting expressly accepts responsibility for such design in writing.
7. In order to make a claim under the Gerard Lighting Warranty, the Owner must:
   - 7.1. contact Gerard Lighting to obtain a Returned Goods Authorisation Number for the Goods and to be notified of Gerard Lighting's return address for the Goods by:
     - 7.1.1. freecall 1300 95 DALI (3254); or
     - 7.1.2. post to PO Box 314, Padstow NSW 2211; or
     - 7.1.3. fax to 1300 95 3257; or
     - 7.1.4. email to sales@diginet.net.au.
   - 7.2. return the Goods at the Owners expense to the return address notified by Gerard Lighting together with all accessories, instructions, specifications or other material supplied with the Goods and a notice in writing:
     - 7.2.1. stating the Returned Goods Authorisation Number for the Goods;
     - 7.2.2. describing in detail the defect or fault in the Goods;
     - 7.2.3. setting out the Owner's contact details (including postal address, email address and telephone numbers at which the Owner can be contacted during usual business hours).
   - 7.3. Gerard Lighting will not accept any returned Goods which have not been returned strictly in accordance with the above instructions.
8. Gerard Lighting will examine any returned Goods and if Gerard Lighting determines that they are defective through no fault of the Owner and are otherwise undamaged, Gerard Lighting will repair or replace the Goods free of charge.
9. Gerard Lighting will notify the Owner whether it accepts the Goods are defective within a reasonable time of return.
10. Gerard Lighting will not be responsible for any costs of de-installation, re-installation, returning Goods or for redelivery of the Goods (whether original or repaired and/or replacement Goods) by Gerard Lighting and any other related expenses of the Owner in claiming under the Gerard Lighting Warranty.
11. Gerard Lighting will not be responsible for any loss or damage to the Goods occurring while the Goods are in transit (either on return to Gerard Lighting or upon redelivery to the Owner of the original or repaired and/or replacement Goods).
12. Gerard Lighting will not be responsible (whether arising in contract or tort (including negligence) or under any statute) for any special, indirect, incidental, consequential or economic losses or damages (including loss of data, business, profits, revenue, anticipated savings, bargain, opportunity or goodwill) whether or not the possibility of those losses or damages being suffered had been brought to the attention of Gerard Lighting.

The Australian Consumer Law requires the inclusion of the following statement with the Gerard Lighting Warranty:
Our goods come with guarantees that cannot be excluded under the Australian Consumer Law. You are entitled to a replacement or refund for a major failure and for compensation for any other reasonably foreseeable loss or damage. You are also entitled to have the goods repaired or replaced if the goods fail to be of acceptable quality and the failure does not amount to a major failure.

Diginet is a brand of Gerard Lighting

June 2018

WWW.DIGINET.NET.AU

Product of Gerard Lighting Pty Ltd
ABN – 89 095 788 864
96-112 Gow Street
Padstow NSW 2211

Contact
General Enquiries: 1300 95 DALI (3254) or sales@diginet.net.au
Technical Services: 1300 95 3244 or support@diginet.net.au
Fax: 1300 95 3257

Issue 1 June 2018 Item 14-14-031K-01-01